ITEM	QTY	DESCRIPTION	PART NUMBER
1	1	FLAP PLOW	U5002763S
2	1	SCALE, SELF-ADHESIVE PET, 200mm L TO R, CUT TO 100mm	U5008841P_CFG100
3	2	COLLAR, 6x10x10 LG	U5009116P
A 4	2	ADJUSTABLE LEVER, M6 X 25	U5009432P
5	2	STRIP NUT, M6x1 65mm SPACING	U5009128P
6	1	BRKT, TOP FLAP GUIDING MT	U5009149M
7	2	EXP" M6 METRIC FLAT WASHER (STN STL)	U6002507P_EXP
8	2	EXP" M6 HIGH COLLAR LOCK WASHER (STN STL)	U6002596P_EXP
9	2	"EXP" SOCKET HEAD CAP SCREW, M6X1 x 20.0 LG (STN STL)	U6003061P_EXP

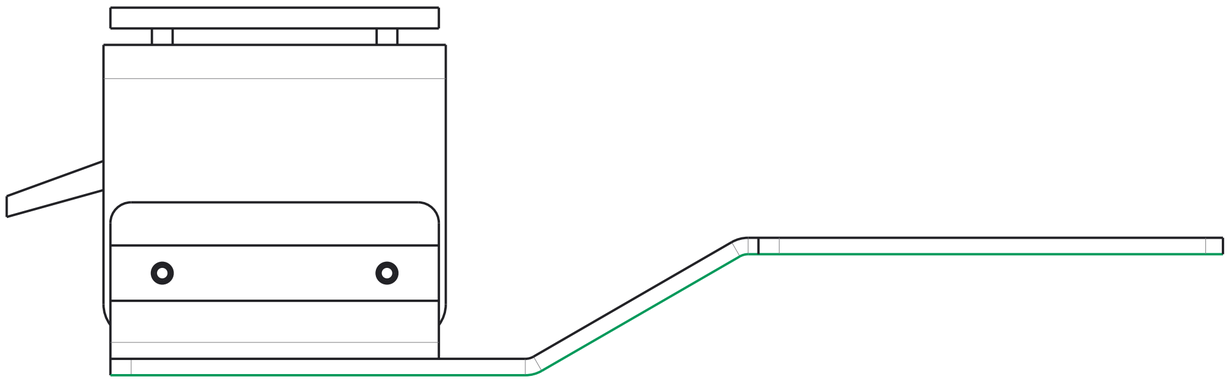

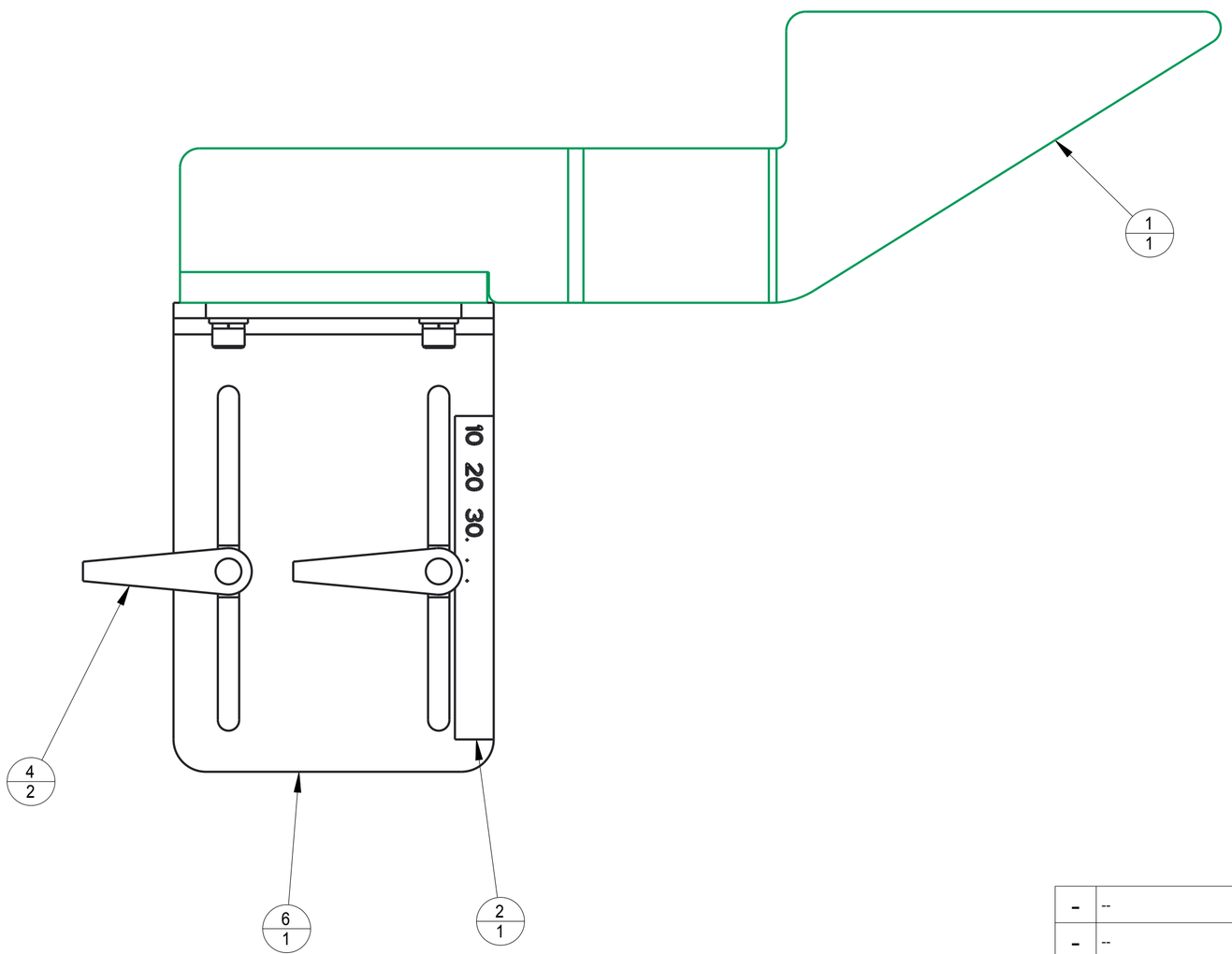

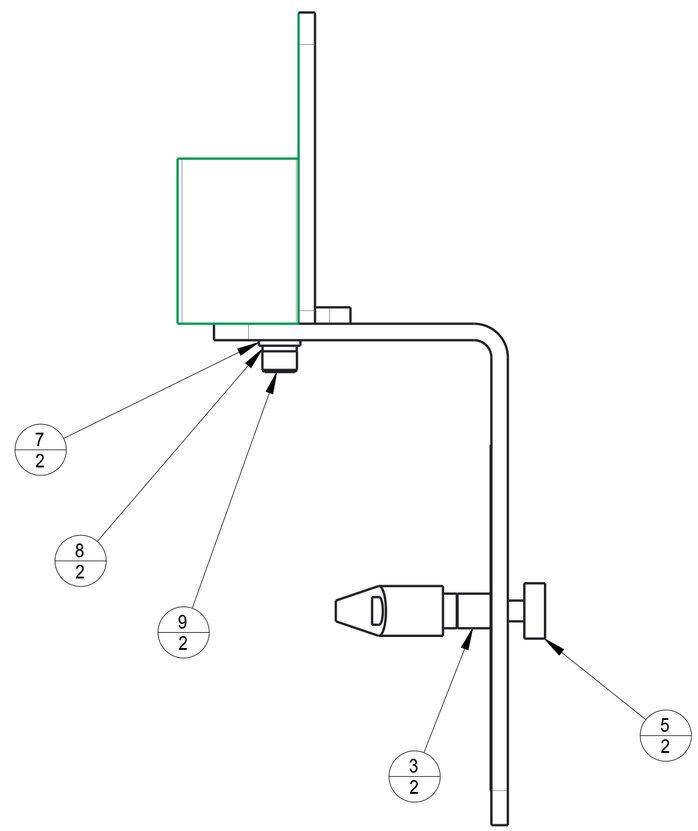

REV.	DESCRIPTION	BY / DATE	CHK'D / DATE
-	--		
-	--		
-	--		
-	--		
A	ITEM 4 WAS U5009117P SEE ECN002205	RT 3-13-09	

NOTICE: THIS DRAWING AND ALL DATA, DESIGNS, STRUCTURES AND DESCRIPTIONS SHOWN THEREON ARE OUR PROPERTY. ALL PATENTABLE AND/OR COPYRIGHTABLE MATTER THEREON HAS BEEN PROTECTED BY APPLICATIONS FOR PATENT AND/OR COPYRIGHT. THIS DRAWING IS LOANED FOR A SPECIFIC PURPOSE AND MUST BE RETURNED ON DEMAND. AND MAY NOT BE COPIED, REPRODUCTED, OR DUPLICATED IN WHOLE OR IN PART, WITHOUT OUR SPECIFIC AUTHORIZATION IN WRITING.

1250M	SERIAL NUMBER	SUB ASSEMBLY	REMARKS
MACHINE			

UNLESS OTHERWISE SPECIFIED: ALL DIMENSIONS MILLIMETER, DO NOT SCALE DRAWING

GENERAL TOLERANCE: HOLE, SLOT H12 OTHERS js12
CONCENTRICITY ±0.02 PERPENDICULARITY ±0.02/CM ANGULARITY ±0.25°
BREAK SHARP CORNERS REMOVE ALL BURRS FINISHED SURFACES 3.2 (125)

METRIC

MATERIAL:

FINISH:

DRW BY:	CHK'D :	ENGR. BY :
DATE: 20-Nov-06	DATE :	DATE : .....

TITLE: ASSY, GUIDE, NON-OP. SIDE, LOAD/FOLD, RH

MeadWestvaco — Packaging Systems, Atlanta, Georgia, Deols, FRANCE

3/4		C		U5009199M	A		1/1
SCALE		DRW. SIZE	DRW. N°		REV		SHEETS